DATA SHEET
Multiple Lens Series

Component of the simpleLED® Program

MULTIPLE LENS FOR LUXEON® REBEL AND LUXEON® REBEL ES

- Optical grade PMMA with UV protection.
- Superior optical efficiency, greater than 90%.
- High temperature resistance(105C/220F).
- UV treated Polycarbonate Lens Module Base with precision position locking.

  (Refer to mechanical drawing for details dimension)
- Ultra compact size.
- Patent pending interchangeable lens module design.

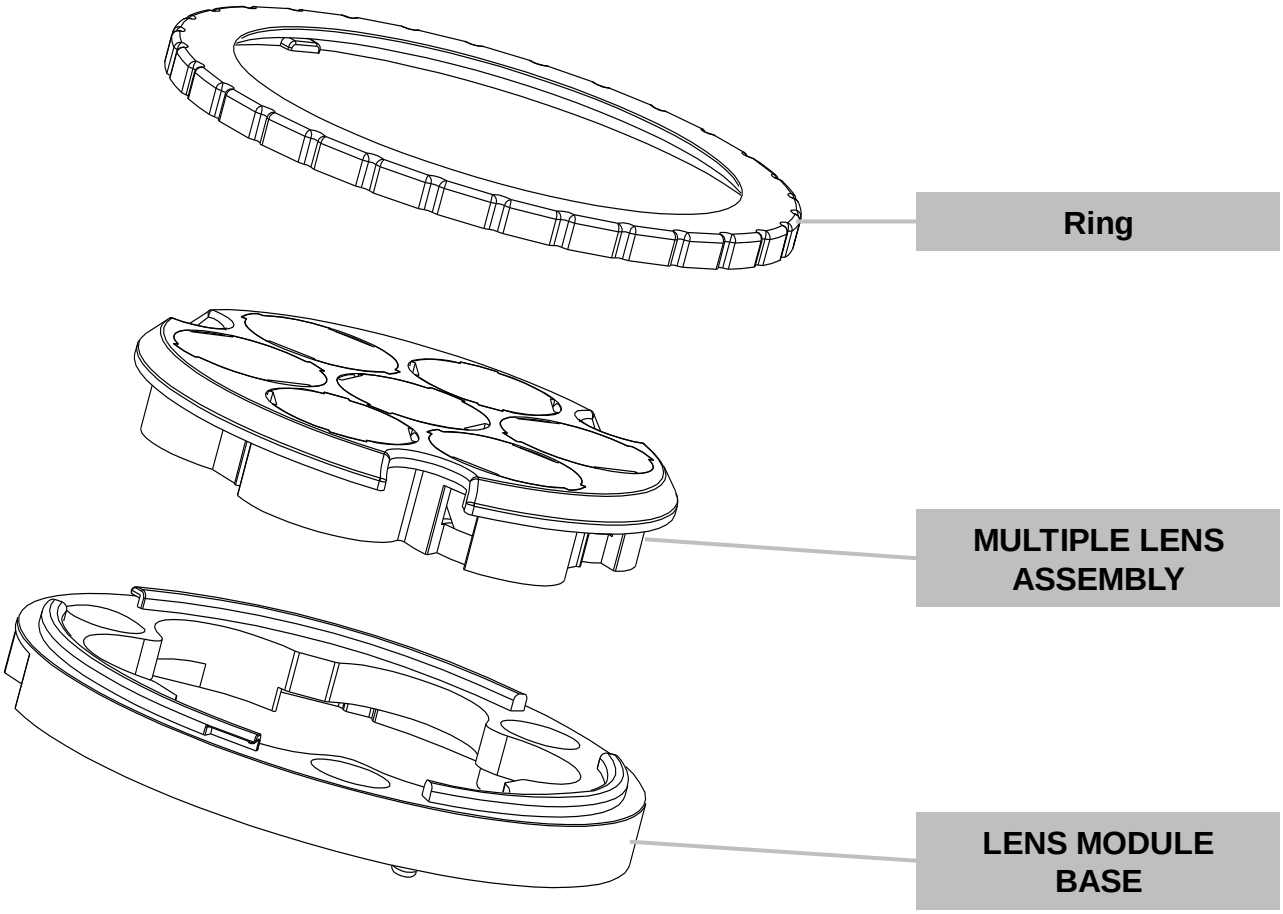

PART NUMBERING & ORDERING INFORMATION

Part Number :

GLVA1	BS	07	X	50
1	2	3	4	5

1. ACCESSORIES CATEGORY NUMBER

GLVA1

Optics Number

2. OPTICS*

00 – No Lens For Multiple Lens Assembly

BS – 17 / 22 Degree Lens

BN – 25 / 26 Degree Lens

BF – 40 / 38 Degree Lens

BW – 49 / 54 Degree Lens

*LUXEON® REBEL/LUXEON® REBEL ES Beam Angles.

3. LENS NUMBER

00 – For Ring Or Lens Module Base Only Spare Parts

03 – 3 Lens Assembly

07 – 7 Lens Assembly

09 – 9 Lens Assembly

12 – 12 Lens Assembly

18 – 18 Lens Assembly

4. RING / LENS MODULE BASE

X – With Lens Module Base Only; Preceding with 00

Y – With Ring Only; Multiple Lens

C – With Ring/Lens Module Base; Multiple Lens

N – Lens only; No Ring, No Lens Module Base

5. DIAMETER OF MULTIPLE LENS

34 – For 3 Lens Assembly

50 – For 7 Lens Assembly

63 – For 9 Lens Assembly

76 – For 12 Lens Assembly

95 – For 18 Lens Assembly

RELATIVE INTENSITY OF GLVA1BS

- FOR LUXEON® REBEL

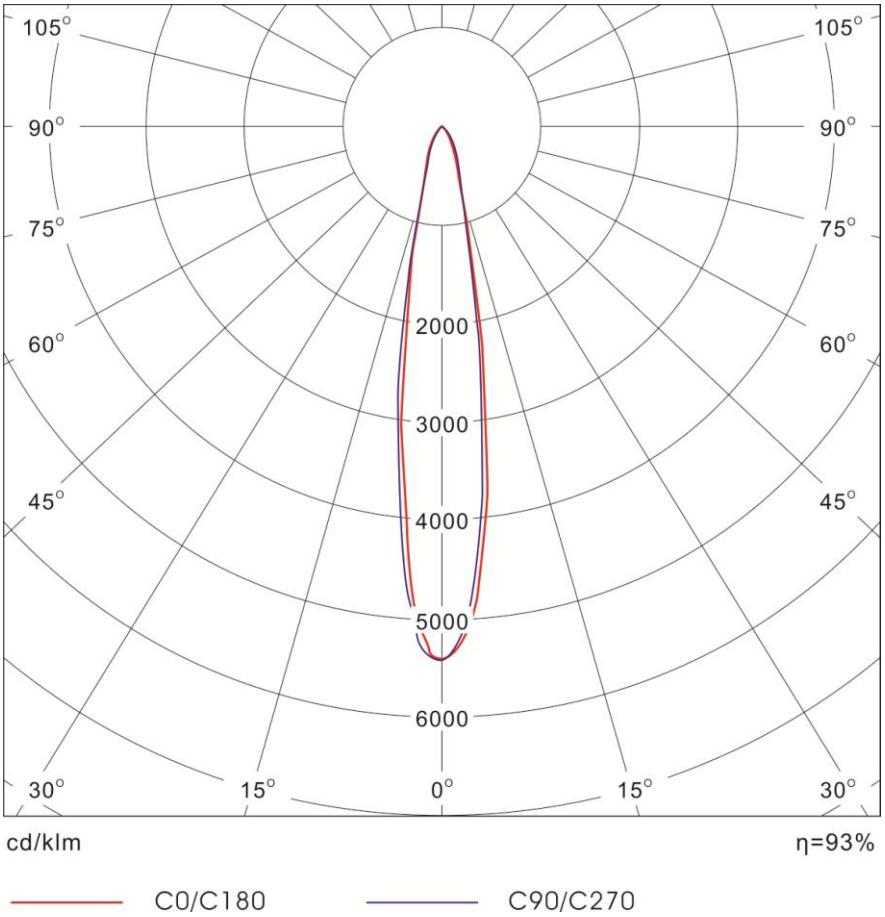

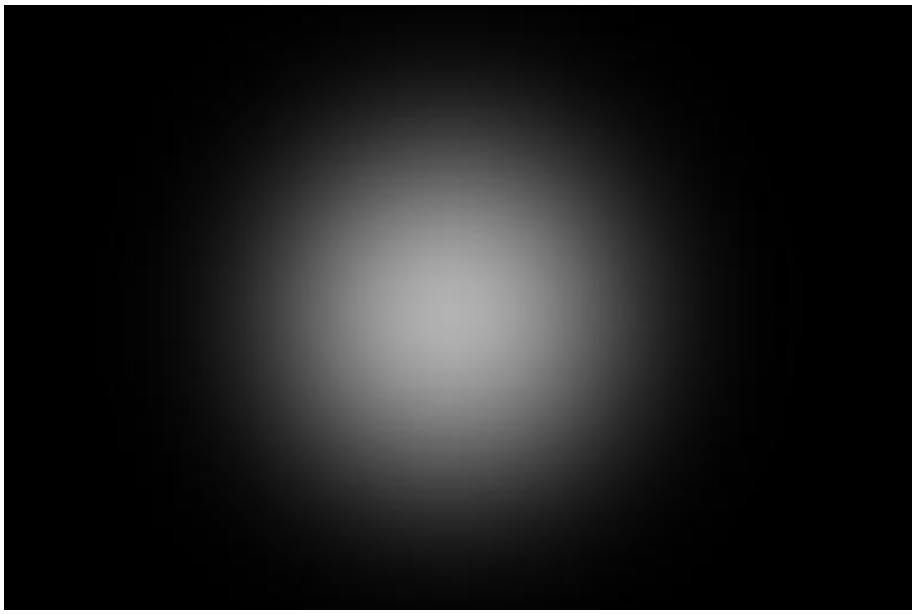

RELATIVE INTENSITY OF GLVA1BS

- FOR LUXEON ® REBEL ES

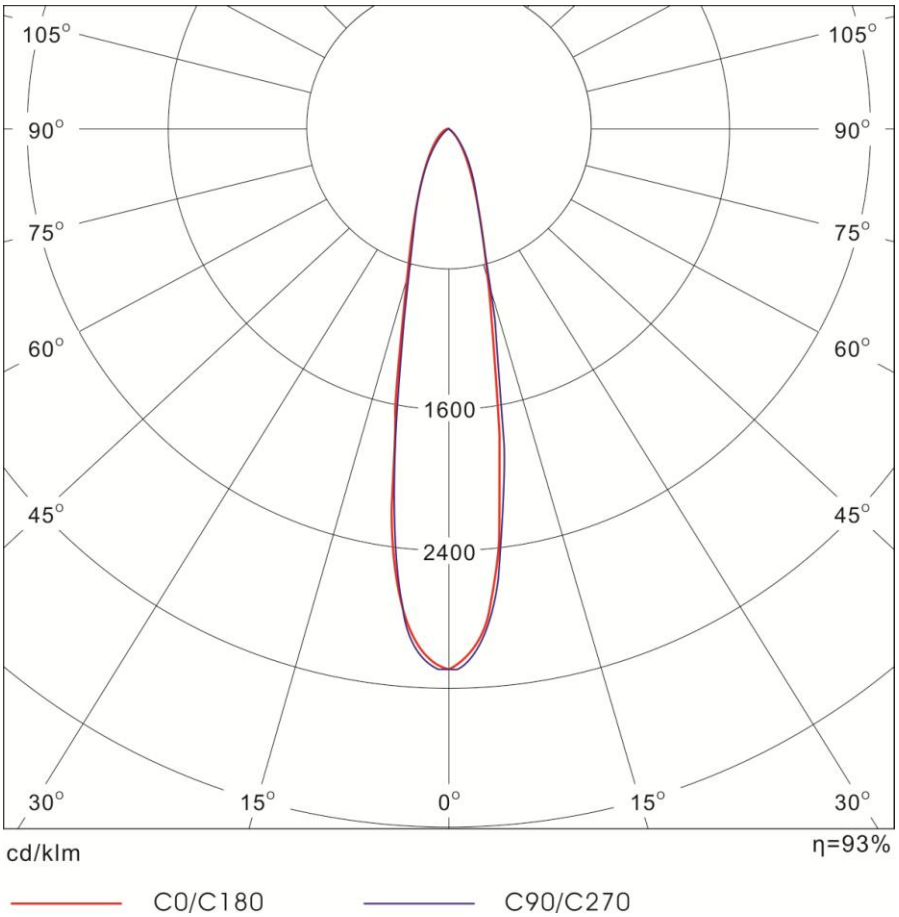

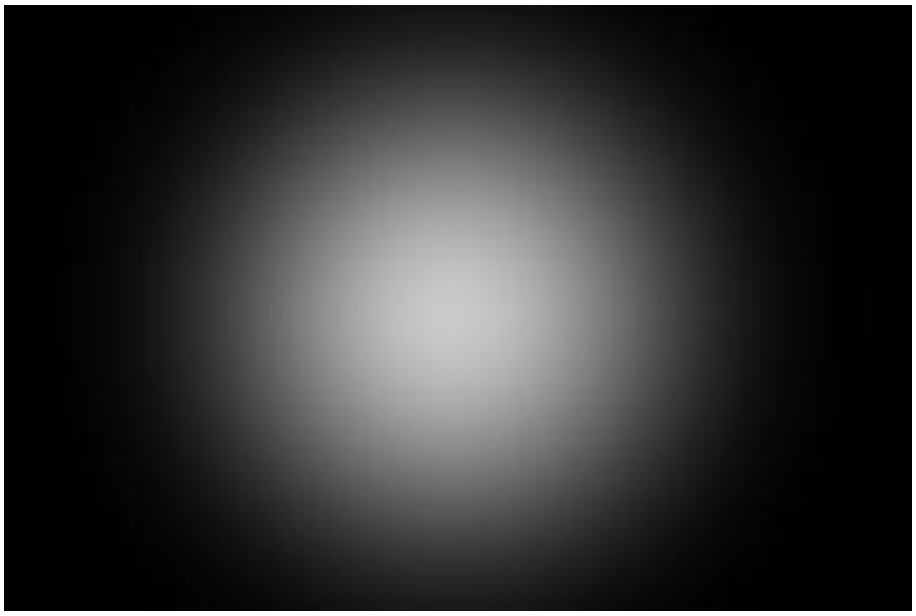

RELATIVE INTENSITY OF GLVA1BN

- FOR LUXEON® REBEL

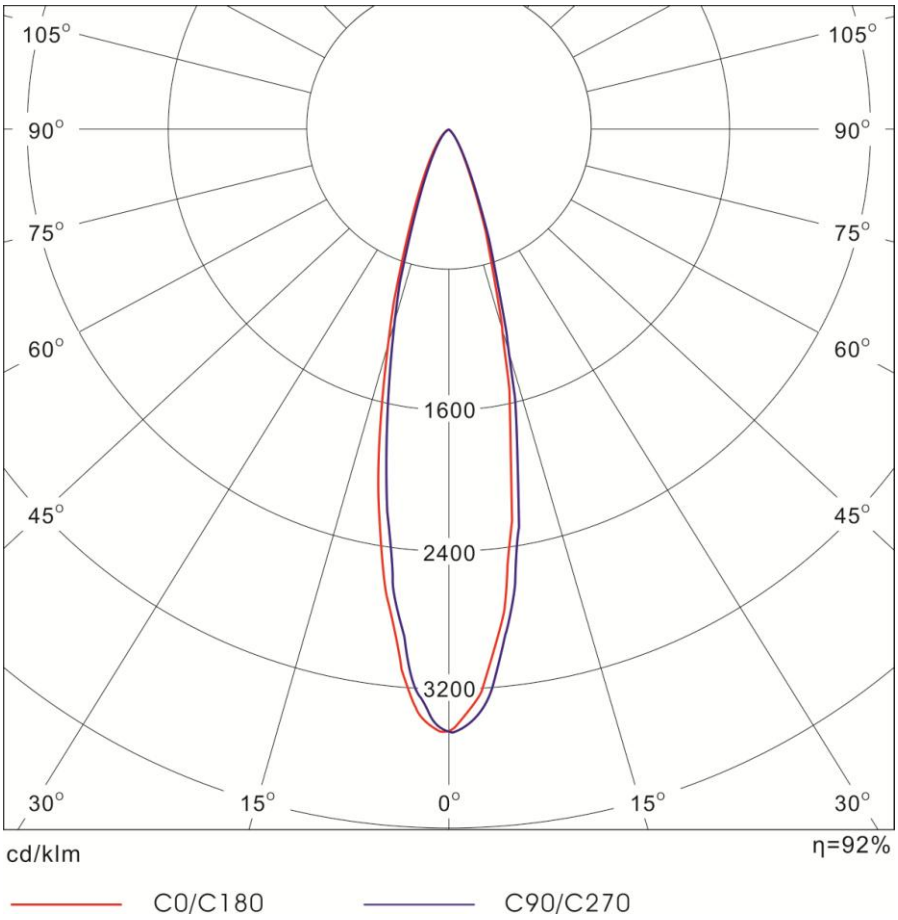

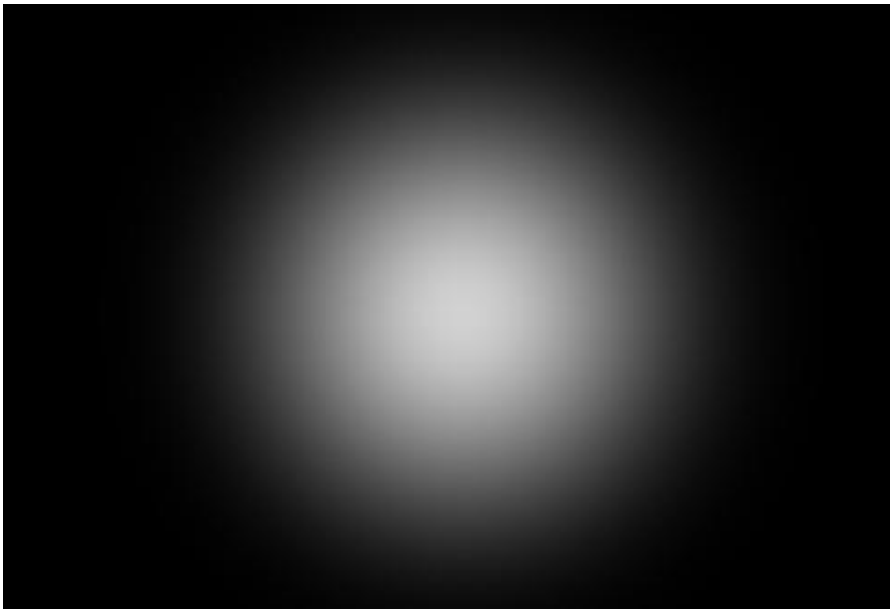

RELATIVE INTENSITY OF GLVA1BN

- FOR LUXEON® REBEL ES

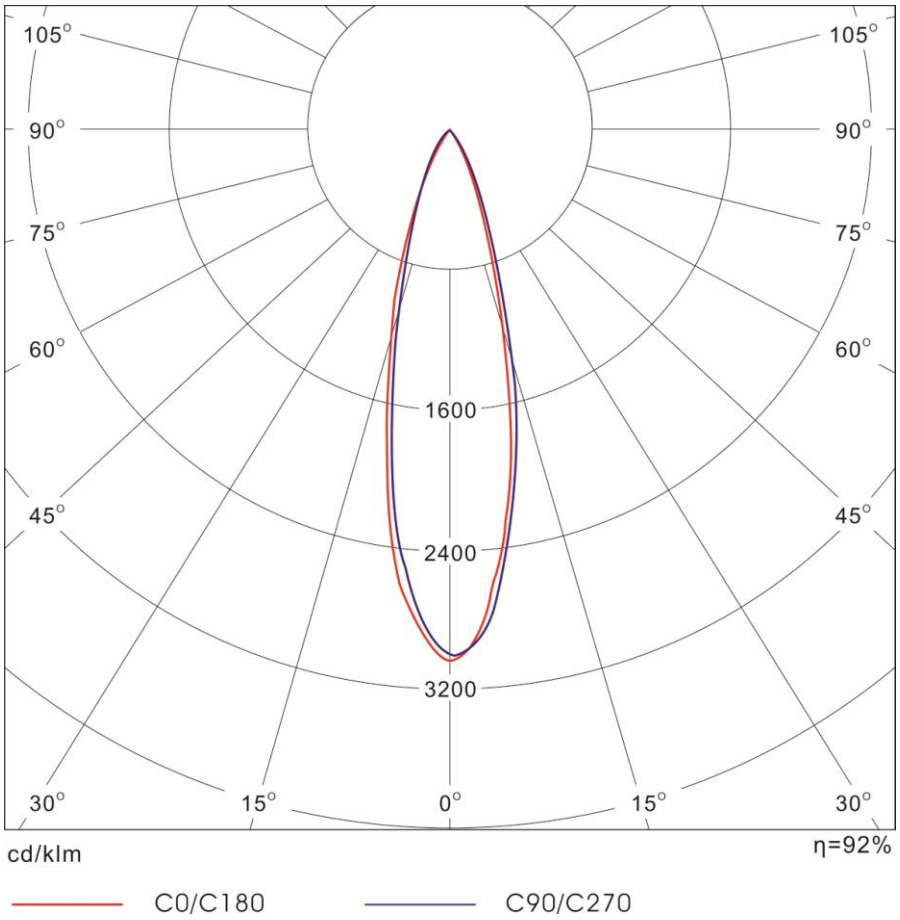

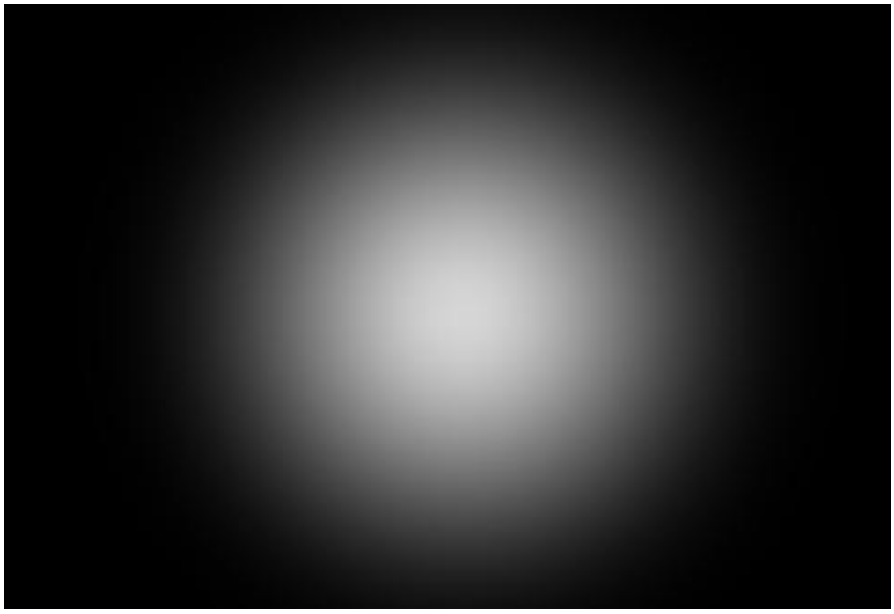

RELATIVE INTENSITY OF GLVA1BF

- FOR LUXEON® REBEL

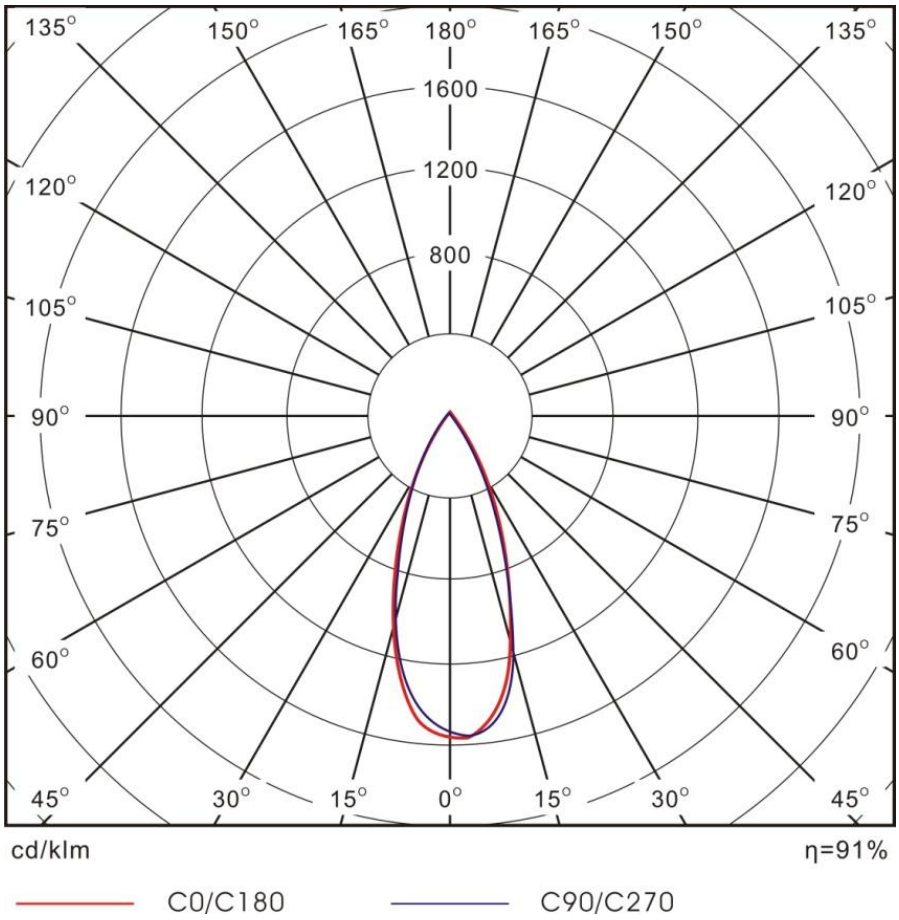

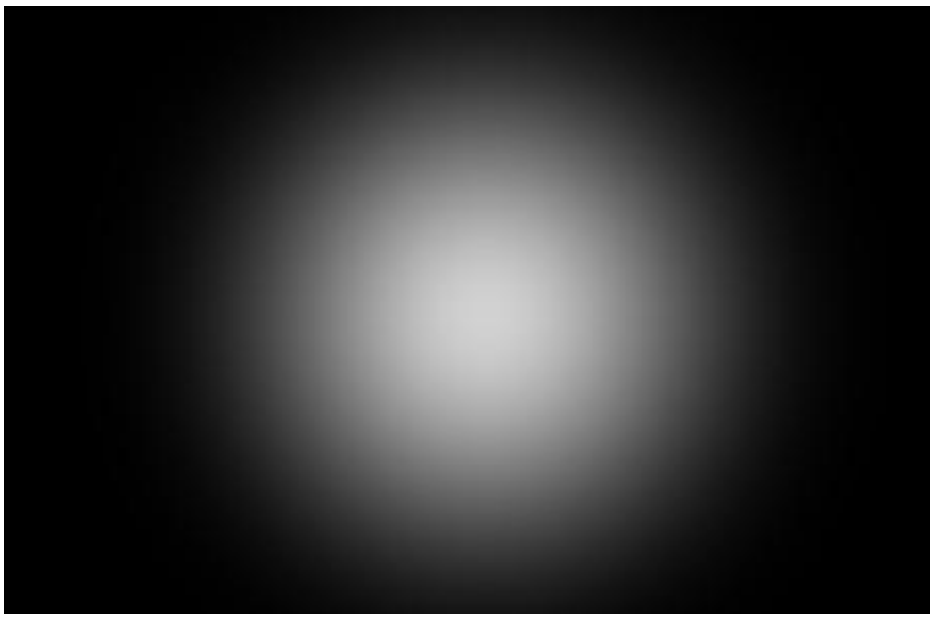

RELATIVE INTENSITY OF GLVA1BF

- FOR LUXEON® REBEL ES

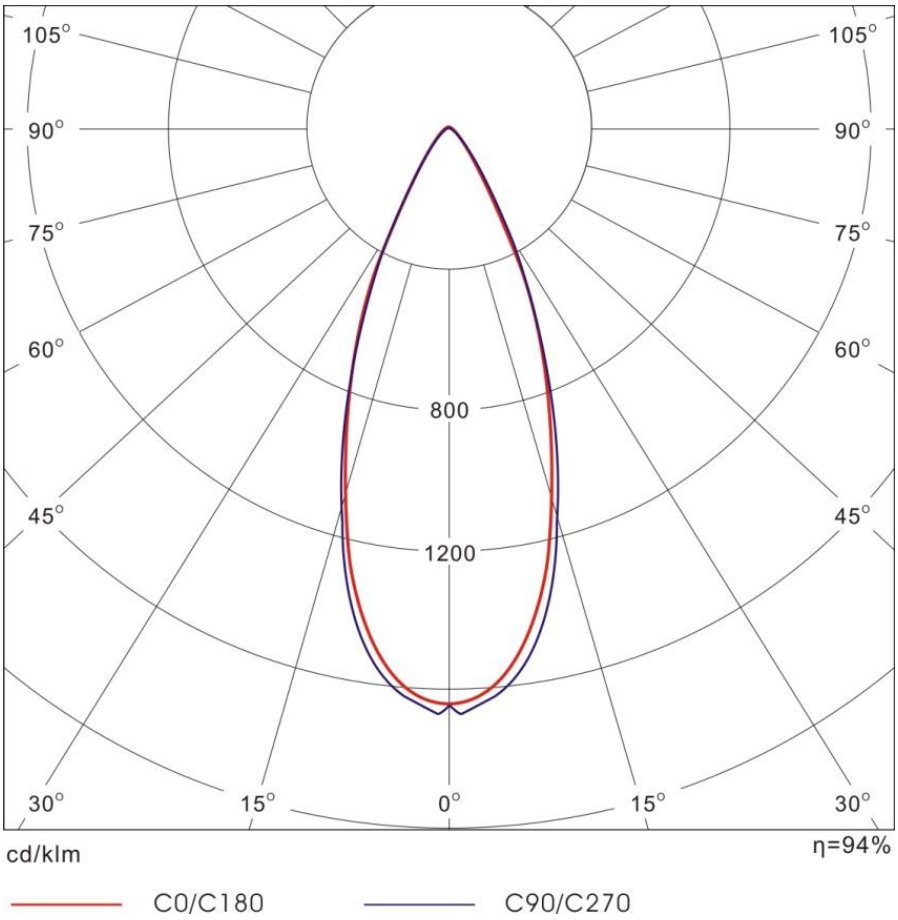

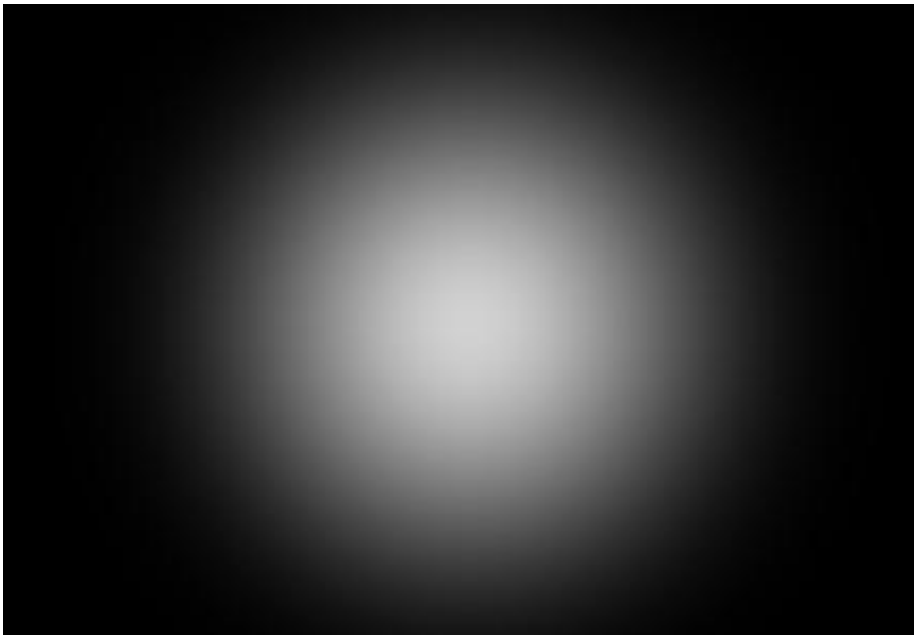

RELATIVE INTENSITY OF GLVA1BW

- FOR LUXEON® REBEL

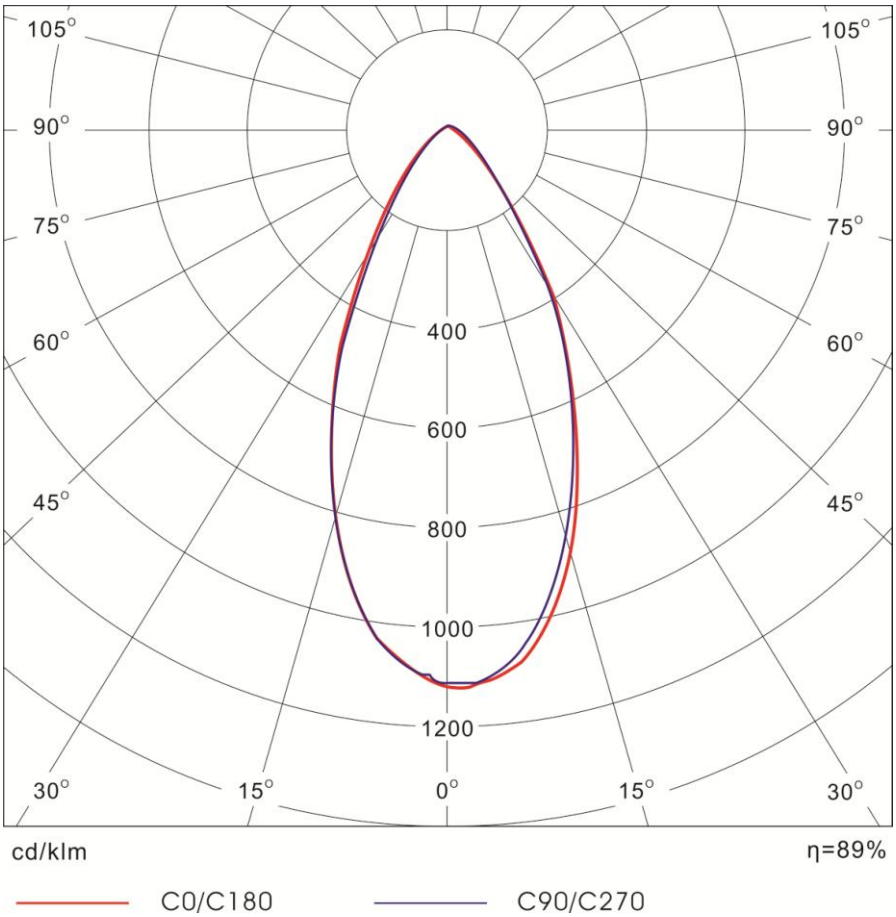

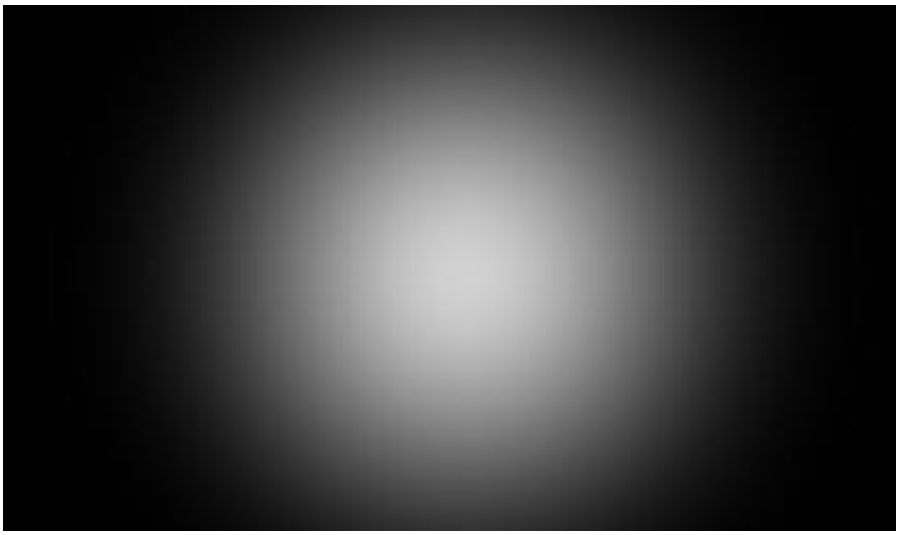

RELATIVE INTENSITY OF GLVA1BW

- FOR LUXEON® REBEL ES

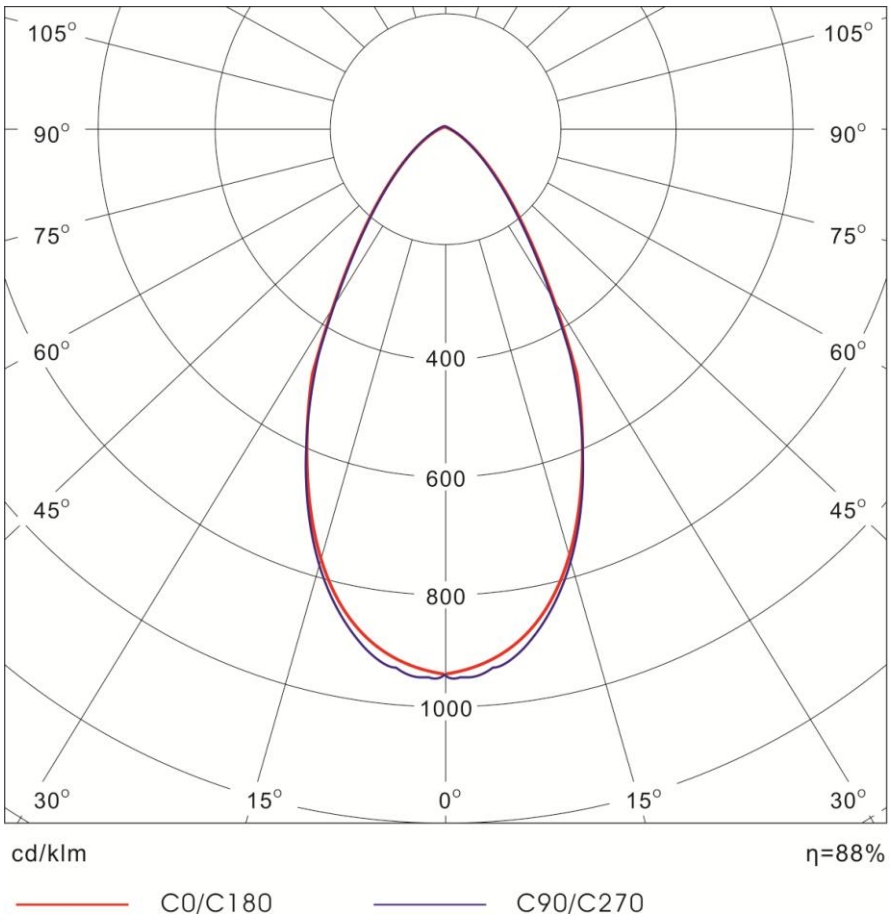

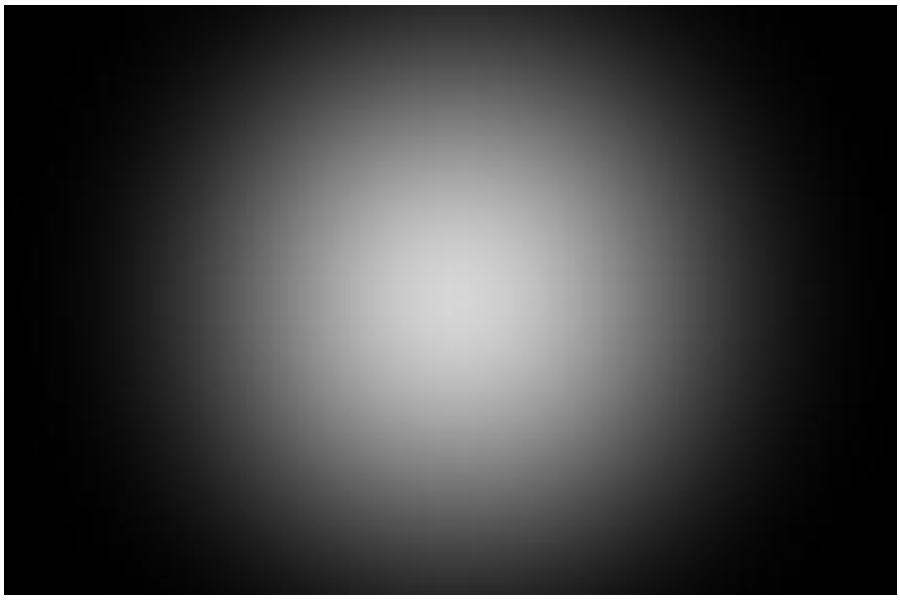

MODEL LIST

LENS MODULE BASE ONLY

MODEL	BEAM ANGLE	LENS NUMBER	RING	LENS MODULE BASE	SELECTION
GLVA10000X34	-	-	-	YES	☐
GLVA10000X50	-	-	-	YES	☐
GLVA10000X63	-	-	-	YES	☐
GLVA10000X76	-	-	-	YES	☐
GLVA10000X95	-	-	-	YES	☐

RING ONLY

MODEL	BEAM ANGLE	LENS NUMBER	RING	LENS MODULE BASE	SELECTION
GLVA10000Y34	-	-	YES	-	☐
GLVA10000Y50	-	-	YES	-	☐
GLVA10000Y63	-	-	YES	-	☐
GLVA10000Y76	-	-	YES	-	☐
GLVA10000Y95	-	-	YES	-	☐

COMBINATION OF RING PLUS LENS MODULE BASE WITHOUT LENS ASSEMBLY

MODEL	BEAM ANGLE	LENS NUMBER	RING	LENS MODULE BASE	SELECTION
GLVA10000C34	-	-	YES	YES	☐
GLVA10000C50	-	-	YES	YES	☐
GLVA10000C63	-	-	YES	YES	☐
GLVA10000C76	-	-	YES	YES	☐
GLVA10000C95	-	-	YES	YES	☐

MODEL LIST

LENS ASSEMBLY ONLY

MODEL	BEAM ANGLE	LENS NUMBER	RING	LENS MODULE BASE	SELECTION
GLVA1BS03N34	17x18 / 22x23	3	-	-	☐
GLVA1BN03N34	25x25 / 26x26	3	-	-	☐
GLVA1BF03N34	40x40 / 38x39	3	-	-	☐
GLVA1BW03N34	49x52 / 54x56	3	-	-	☐
GLVA1BS07N50	17x18 / 22x23	7	-	-	☐
GLVA1BN07N50	25x25 / 26x26	7	-	-	☐
GLVA1BF07N50	40x40 / 38x39	7	-	-	☐
GLVA1BW07N50	49x52 / 54x56	7	-	-	☐
GLVA1BS09N63	17x18 / 22x23	9	-	-	☐
GLVA1BN09N63	25x25 / 26x26	9	-	-	☐
GLVA1BF09N63	40x40 / 38x39	9	-	-	☐
GLVA1BW09N63	49x52 / 54x56	9	-	-	☐
GLVA1BS12N76	17x18 / 22x23	12	-	-	☐
GLVA1BN12N76	25x25 / 26x26	12	-	-	☐
GLVA1BF12N76	40x40 / 38x39	12	-	-	☐
GLVA1BW12N76	49x52 / 54x56	12	-	-	☐
GLVA1BS18N95	17x18 / 22x23	18	-	-	☐
GLVA1BN18N95	25x25 / 26x26	18	-	-	☐
GLVA1BF18N95	40x40 / 38x39	18	-	-	☐
GLVA1BW18N95	49x52 / 54x56	18	-	-	☐

MODEL LIST

COMBINATION OF RING PLUS LENS ASSEMBLY

MODEL	BEAM ANGLE	LENS NUMBER	RING	LENS MODULE BASE	SELECTION
GLVA1BS03Y34	17x18 / 22x23	3	YES	-	☐
GLVA1BN03Y34	25x25 / 26x26	3	YES	-	☐
GLVA1BF03Y34	40x40 / 38x39	3	YES	-	☐
GLVA1BW03Y34	49x52 / 54x56	3	YES	-	☐
GLVA1BS07Y50	17x18 / 22x23	7	YES	-	☐
GLVA1BN07Y50	25x25 / 26x26	7	YES	-	☐
GLVA1BF07Y50	40x40 / 38x39	7	YES	-	☐
GLVA1BW07Y50	49x52 / 54x56	7	YES	-	☐
GLVA1BS09Y63	17x18 / 22x23	9	YES	-	☐
GLVA1BN09Y63	25x25 / 26x26	9	YES	-	☐
GLVA1BF09Y63	40x40 / 38x39	9	YES	-	☐
GLVA1BW09Y63	49x52 / 54x56	9	YES	-	☐
GLVA1BS12Y76	17x18 / 22x23	12	YES	-	☐
GLVA1BN12Y76	25x25 / 26x26	12	YES	-	☐
GLVA1BF12Y76	40x40 / 38x39	12	YES	-	☐
GLVA1BW12Y76	49x52 / 54x56	12	YES	-	☐
GLVA1BS18Y95	17x18 / 22x23	18	YES	-	☐
GLVA1BN18Y95	25x25 / 26x26	18	YES	-	☐
GLVA1BF18Y95	40x40 / 38x39	18	YES	-	☐
GLVA1BW18Y95	49x52 / 54x56	18	YES	-	☐

MODEL LIST

COMBINATION OF RING AND LENS MODULE BASE PLUS LENS ASSEMBLY

MODEL	BEAM ANGLE	LENS NUMBER	RING	LENS MODULE BASE	SELECTION
GLVA1BS03C34	17x18 / 22x23	3	YES	YES	☐
GLVA1BN03C34	25x25 / 26x26	3	YES	YES	☐
GLVA1BF03C34	40x40 / 38x39	3	YES	YES	☐
GLVA1BW03C34	49x52 / 54x56	3	YES	YES	☐
GLVA1BS07C50	17x18 / 22x23	7	YES	YES	☐
GLVA1BN07C50	25x25 / 26x26	7	YES	YES	☐
GLVA1BF07C50	40x40 / 38x39	7	YES	YES	☐
GLVA1BW07C50	49x52 / 54x56	7	YES	YES	☐
GLVA1BS09C63	17x18 / 22x23	9	YES	YES	☐
GLVA1BN09C63	25x25 / 26x26	9	YES	YES	☐
GLVA1BF09C63	40x40 / 38x39	9	YES	YES	☐
GLVA1BW09C63	49x52 / 54x56	9	YES	YES	☐
GLVA1BS12C76	17x18 / 22x23	12	YES	YES	☐
GLVA1BN12C76	25x25 / 26x26	12	YES	YES	☐
GLVA1BF12C76	40x40 / 38x39	12	YES	YES	☐
GLVA1BW12C76	49x52 / 54x56	12	YES	YES	☐
GLVA1BS18C95	17x18 / 22x23	18	YES	YES	☐
GLVA1BN18C95	25x25 / 26x26	18	YES	YES	☐
GLVA1BF18C95	40x40 / 38x39	18	YES	YES	☐
GLVA1BW18C95	49x52 / 54x56	18	YES	YES	☐

MECHANICAL DRAWINGS

2D drawing with dimensions: (Unit: mm)

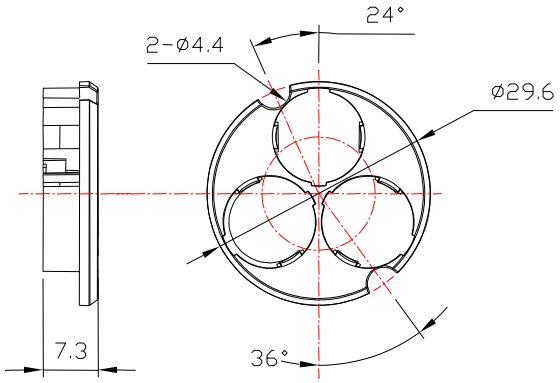

GLVA1B*03N34

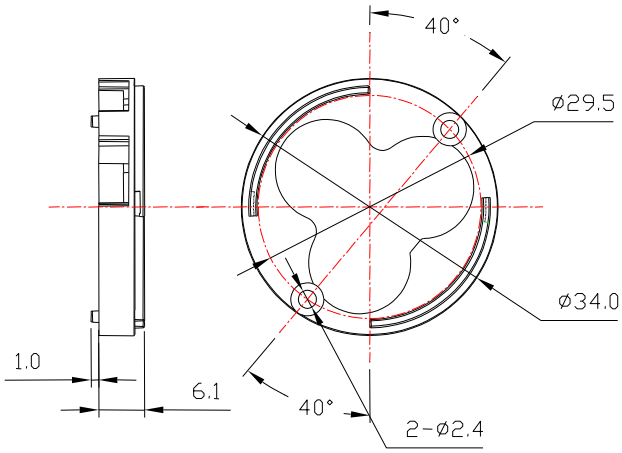

GLVA10000X34

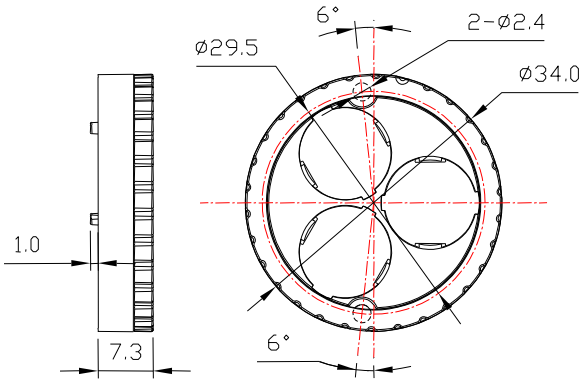

GLVA1B*03C34

MECHANICAL DRAWINGS

2D drawing with dimensions: (Unit: mm)

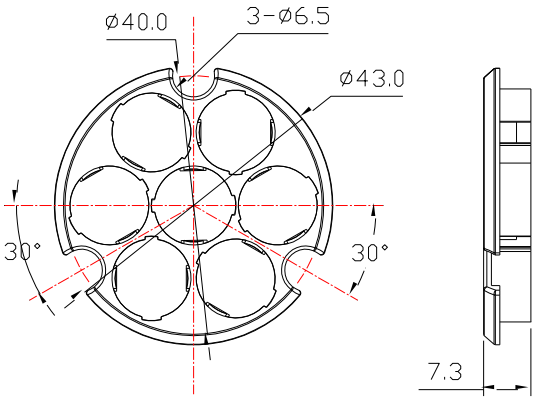

GLVA1B*07N50

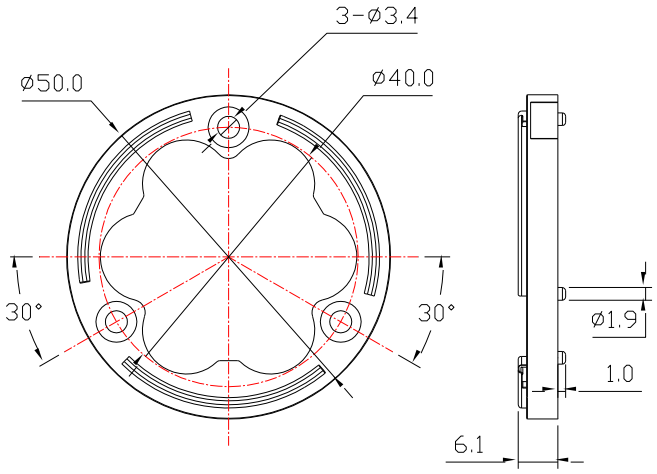

GLVA10000X50

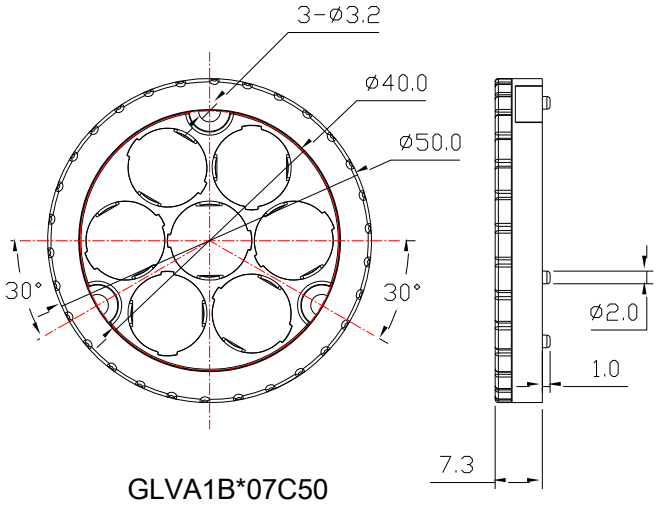

GLVA1B*07C50

MECHANICAL DRAWINGS

2D drawing with dimensions: (Unit: mm)

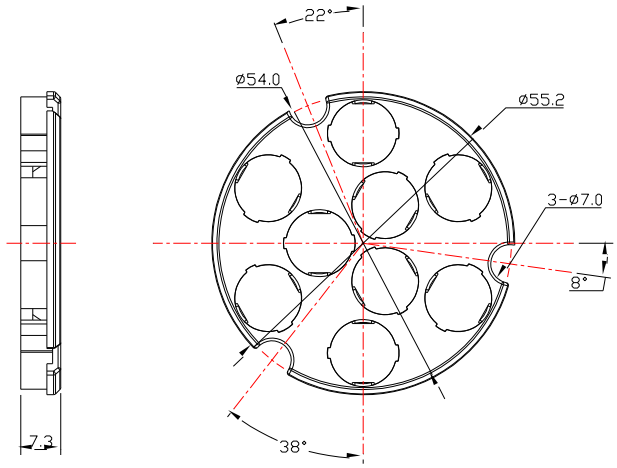

GLVA1B*09N63

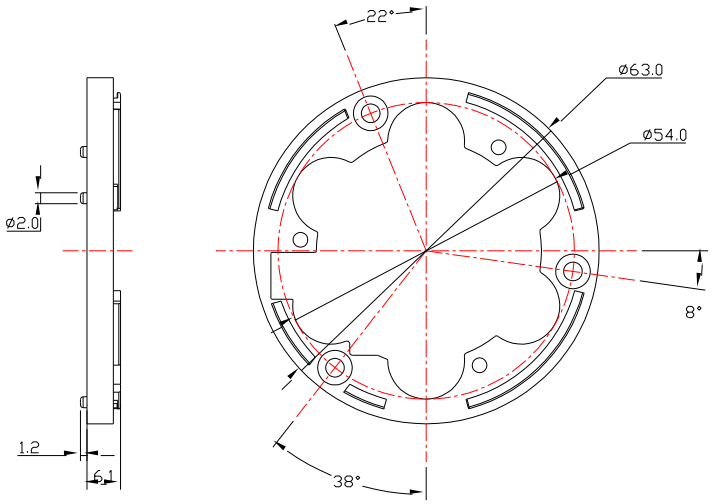

GLVA10000X63

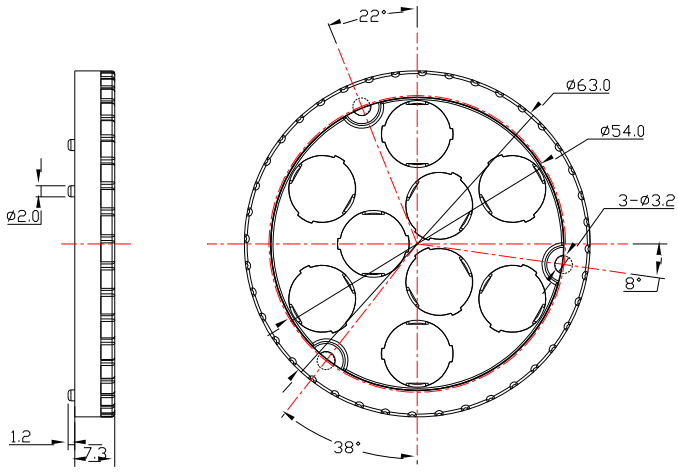

GLVA1B**0963

MECHANICAL DRAWINGS

2D drawing with dimensions: (Unit: mm)

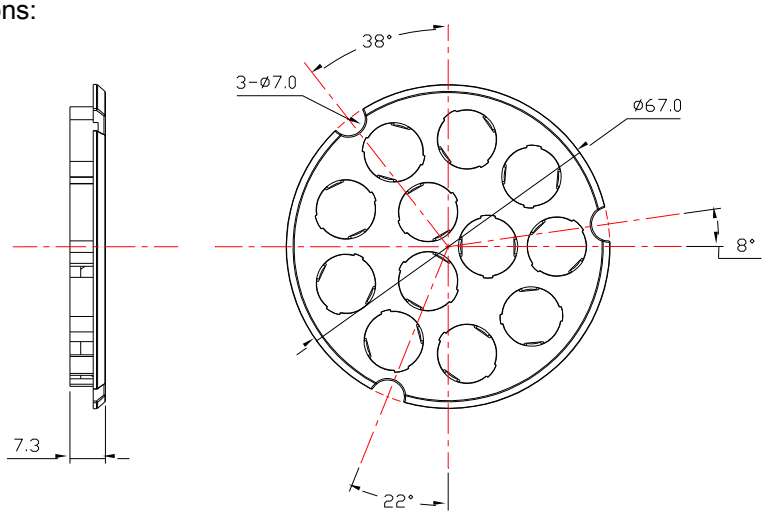

GLVA1B*12N76

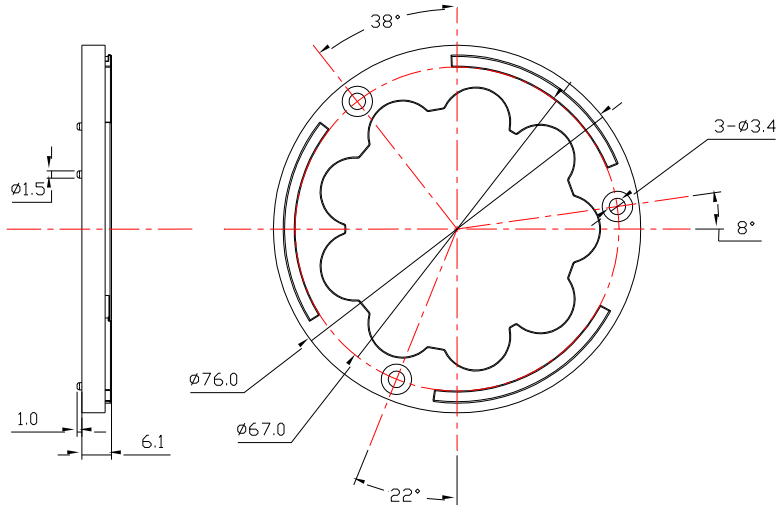

GLVA10000X76

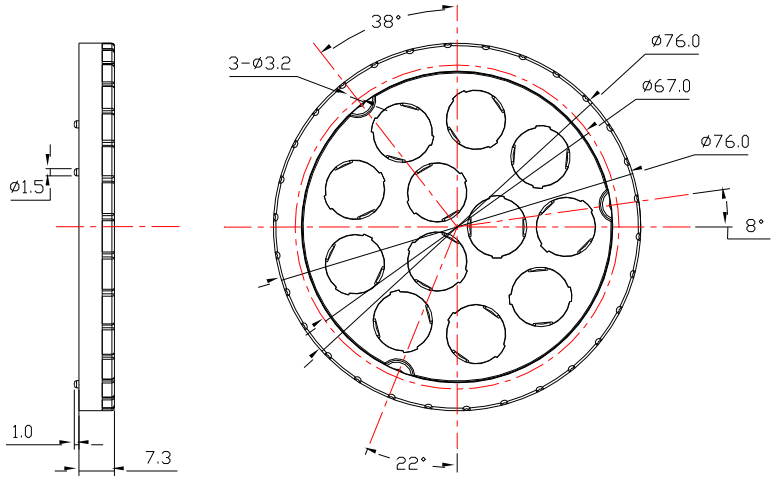

GLVA1B*12C76

MECHANICAL DRAWINGS

2D drawing with dimensions: (Unit: mm)

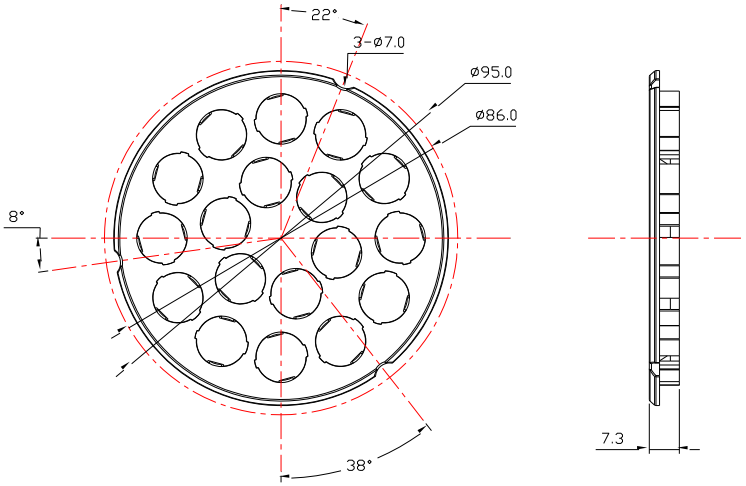

GLVA1B*18N95

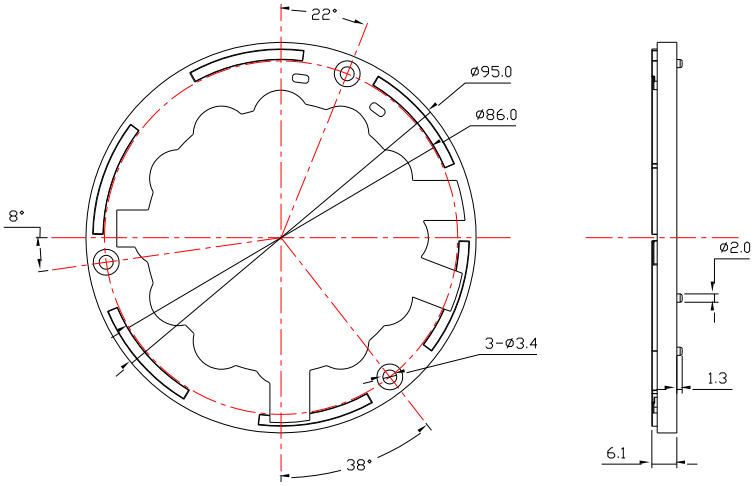

GLVA10000X95

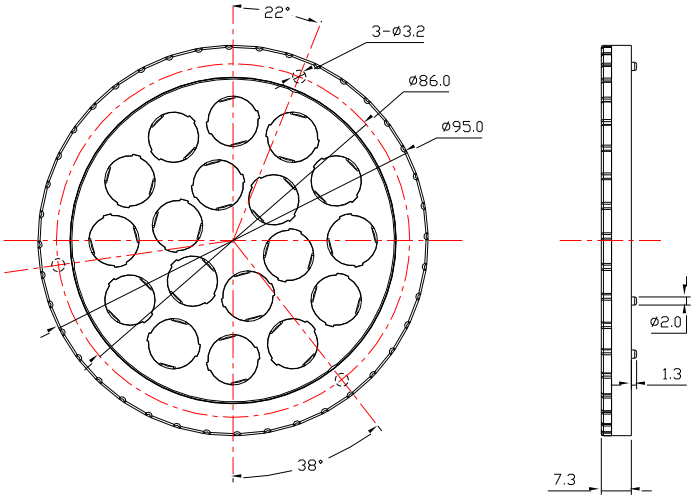

GLVA1B*18C95